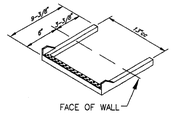

TYPE P-14938-SQ FOR PRECAST MANHOLE SECTIONS
TYPE P-14938 FOR REPLACEMENT OR INSTALLATION IN EXISTING MANHOLES

NOTES:

1. POLYPROPYLENE MANHOLE STEPS W/ STEEL OR ALUMINUM CORE AS MANUFACTURED BY LANE INTERNATIONAL INC. Or OR APPROVED EQUAL.

POLYPROPYLENE MH. STEPS

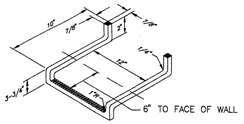

NOTES:

1. ALUMINUM MANHOLE STEPS SHALL BE EXTRUDED 6061-T6 ALUMINUM ALLOY OR APPROVED EQUAL.
2. PORTION EMBEDDED IN MASONRY TO BE COATED WITH ZINC CHROMATE, BITUMINOUS PAINT OR APPROVED EQUAL.

ALUMINUM MH. STEPS

M.H. STEPS

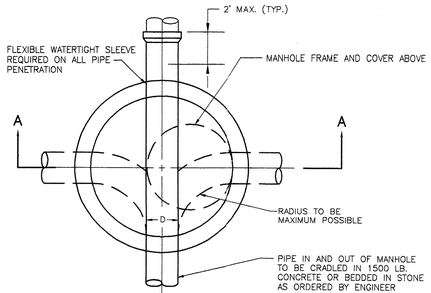

SECTIONAL PLAN

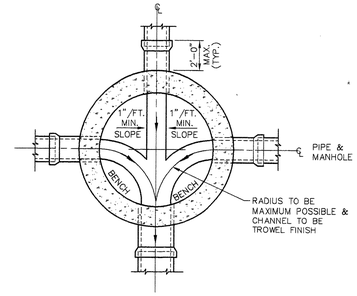

PLAN

NOTE:

MANHOLE CHUTE IS TO BE USED WHERE DIFFERENCE IN INVERT ELEVATIONS BETWEEN INCOMING PIPE AND OUTGOING PIPE IS LESS THAN 2'-0". IF THE DIFFERENCE 2'-0" OR GREATER, THEN DROP CONNECTION SHALL BE MADE AS SHOWN IN DETAIL BELOW. CHANNELING SHALL BE DONE AS SHOWN IN DETAIL ABOVE.

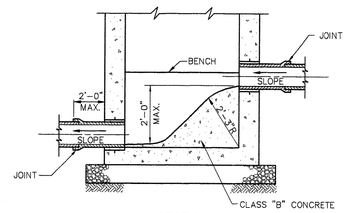

SECTION

MANHOLE CHUTE

N.T.S.

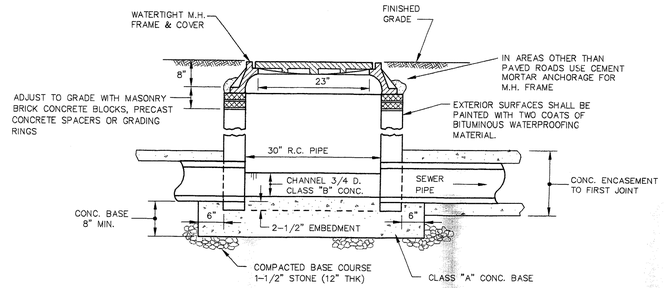

NOTES:
1. SHALLOW M.H. (CIRCULAR) TO BE USED AT LOCATIONS WHERE DISTANCE FROM FINISHED GRADE TO PIPE INVERT IS 3'-0" OR LESS.
2. FOR DEPTHS 3'-0" AND LESS, MEASURED FROM THE TOP OF THE PIPE, CONTRACTOR SHALL INSTALL CAST IRON PIPE, CLASS 150, UNDER TRAFFIC AREAS.

SHALLOW MANHOLE

N.T.S.

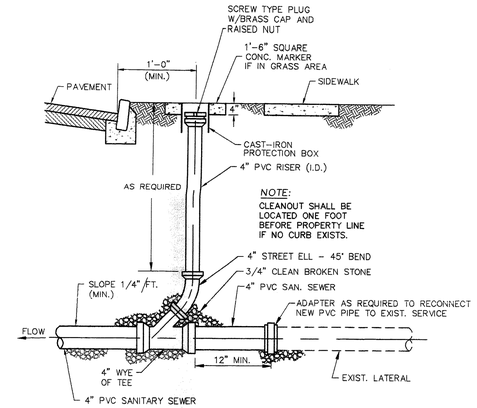

STANDARD CLEANOUT DETAIL

N.T.S.

PIPE DIA.	A	B	C
4"	6"	14"	6"
6"	8-1/8"	16-1/8"	6-1/2"
8"	10-3/8"	18-3/8"	7-1/2"
10"	12-5/8"	20-5/8"	7-1/2"
12"	14-7/8"	22-7/8"	7-1/2"
15"	18-7/8"	26-7/8"	9"

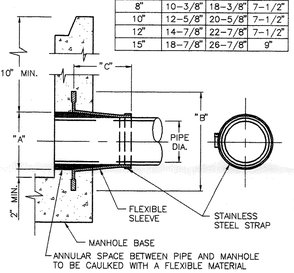

FLEXIBLE MANHOLE SLEEVE

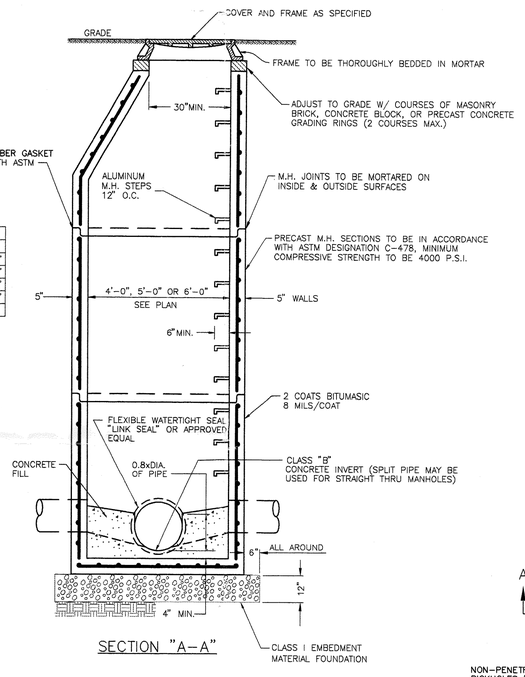

SECTION "A-A"

PRECAST STANDARD MANHOLE DETAIL

N.T.S.

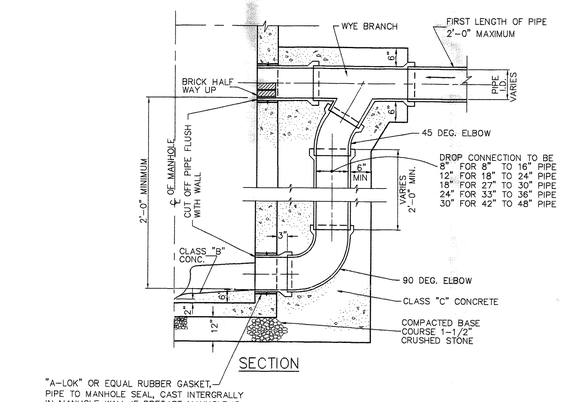

SECTION

"A-LOK" OR EQUAL RUBBER GASKET, PIPE TO MANHOLE SEAL, CAST INTERGRALLY IN MANHOLE WALL IF PRECAST MANHOLE IS USED. SEAL WITH NON-SHRINK GROUT OR PIPE & MANHOLE FILLER AS REQUIRED BY ENGINEER IF MANHOLE IS OF BRICK OR BLOCK.

EXTERNAL DROP MANHOLE CONNECTION

N.T.S.

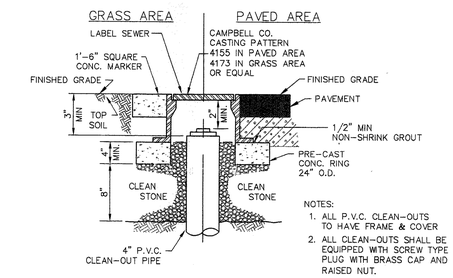

NOTES:
1. ALL P.V.C. CLEAN-OUTS TO HAVE FRAME & COVER
2. ALL CLEAN-OUTS SHALL BE EQUIPPED WITH SCREW TYPE PLUG WITH BRASS CAP AND RAISED NUT.

CLEAN-OUT PROTECTION BOX DETAIL

N.T.S.

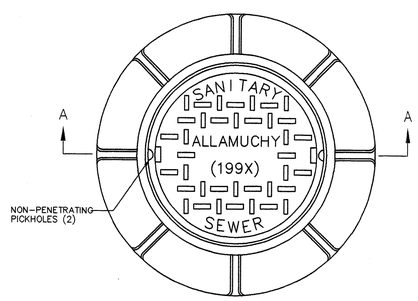

PLAN

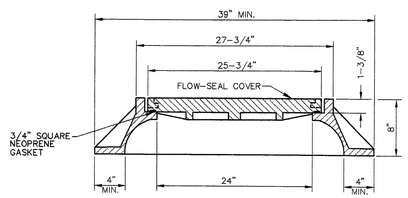

SECTION A-A

NOTES:

1. MANHOLE FRAME AND COVER SHALL BE PATTERN NO. 1203B W/ FLOW-SEAL COVER AS MANUFACTURED BY THE CAMPBELL FOUNDARY CO., OR APPROVED EQUAL.
2. MANHOLE FRAME AND COVER TO BE HEAVY DUTY, CONFORMING TO A.S.T.M. SPECIFICATION A-48 CLASS 30-B WITH SHOP COAT OF ASPHALTIC PITCH.
3. IN EASEMENTS AND REMOTE AREAS BRONZE COVER LOCKING DEVICES AND KEY SHALL BE PROVIDED.

STANDARD OR WATERTIGHT SANITARY MANHOLE FRAME & COVER

N.T.S.

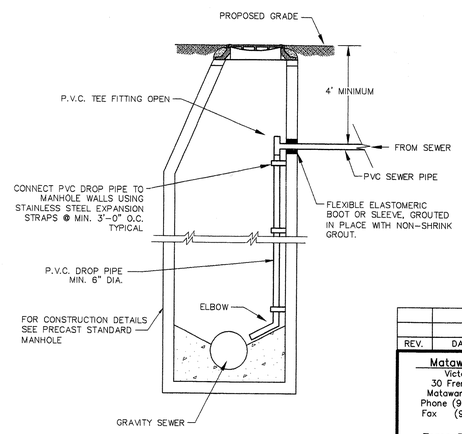

INTERNAL DROP MANHOLE CONNECTION DETAIL

N.T.S.

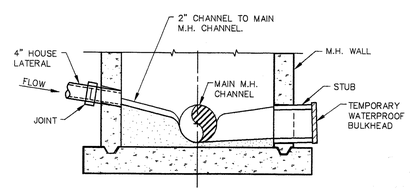

DETAIL OF MANHOLE STUB AND HOUSE LATERAL

N.T.S.

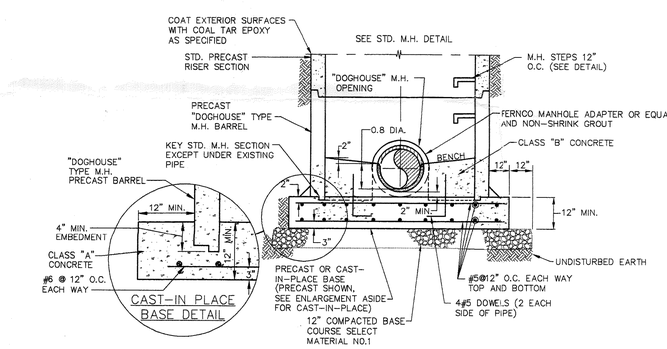

DOGHOUSE MANHOLE DETAIL

N.T.S.

NOTE: ALL UTILITY WORK SHALL BE CONSTRUCTED IN ACCORDANCE WITH CURRENT STANDARDS AND DETAILS OF THE TOWNSHIP OF ALLAMUCHY

REV.	DATE	DRAWN BY	DESCRIPTION

Matawan Office
Victoria Plaza
30 Freneau Avenue
Matawan, N.J. 07747
Phone (908) 583-5900
Fax (908) 583-6619

Toms River Office
70 East Water Street
P.O. Box 5310
Toms River, N.J. 08754
Phone (908) 349-3400
Fax (908) 349-1572

New York Office
Graybar Building
420 Lexington Ave., Suite 233
New York, New York, 10170
Phone (212) 490-2160
Fax (212) 490-2330

MASER SOSINSKI & ASSOCIATES, P.A.
Engineers ■ Planners ■ Surveyors
Landscape Architects
Valley Professional Center
59 East Mill Road Suite 4 -201
Long Valley, N.J. 07853 ■ (908) 876 - 8400

STANDARD SANITARY SEWER DETAILS

FOR

TOWNSHIP OF ALLAMUCHY

TOWNSHIP OF ALLAMUCHY COUNTY OF WARREN NEW JERSEY

SCALE: AS NOTED	DATE: DEC. 1997	JOB No. ALT-041	SHT. No. 1 of 2

PAUL M. STERBENZ
N.J P.E. LIC. No. 32549
P.P. LIC. No. 3702

COPYRIGHT © 1997, MASER, SOSINSKI & ASSOCIATES--ALL RIGHTS RESERVED
THIS DRAWING IS THE PROPERTY OF MASER, SOSINSKI & ASSOCIATES, INC. ORIGINALLY PUBLISHED FOR THE PURPOSE ORIGINALLY INTENDED, WITHOUT THE WRITTEN PERMISSION OF MASER, SOSINSKI & ASSOCIATES, INC. REPRODUCTION

FIELD BOOK	DWG. NO.	CHECKED BY	DRAWN BY	DESIGN BY
---	LT41-SAN	R.F.W.	C.J.F.	H.K.M.

NOV 24,1997-11:4:53 <CG> C:\DWGS\ALT041\LT41-SAN

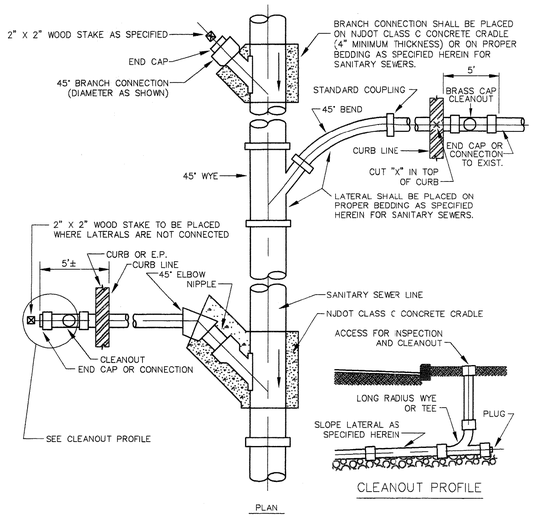

CONSTRUCTION NOTES:

1. DETAIL SHOWS CONSTRUCTION OF A "BRANCH CONNECTION" AND OF TWO DIFFERENT TYPES OF "LATERAL HOUSE CONNECTION". TYPE CONNECTION IS AT CONTRACTOR'S OPTION.
2. SIZE OF LATERAL TO BE AS SHOWN ON THE PLANS OR AS DIRECTED, 4" MINIMUM.
3. CLEAN-OUTS IN DRIVEWAYS SHALL BE COVERED WITH A MONUMENT BOX – CAMPBELL PATTERN NO. 4155 OR EQUAL.

BRANCH & LATERAL HOUSE CONNECTIONS

N.T.S.

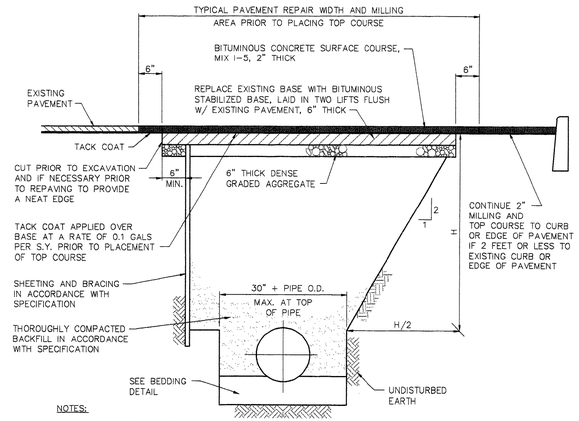

NOTES:

1. ANY SUPERFICIAL SURFACE DAMAGE CAUSED BY THE CONTRACTOR OUTSIDE THE LIMIT SHOWN, SHALL BE PAVED WITH BITUMINOUS CONCRETE SURFACE COURSE MIX I-5 (MIN. THICKNESS 1.5"). WHEN BASE COURSE OF EXISTING PAVEMENT IS DAMAGED BEYOND LIMIT SHOWN CONTRACTOR SHALL EXCAVATE 6" BEYOND DAMAGED AREA AND REPLACE IT WITH 6" BITUMINOUS STABILIZED BASE COURSE. MIX I-5, AND 2" BITUMINOUS CONCRETE SURFACE COURSE, MIX I-2.
2. PAVEMENT REPAIRS MUST BE IN ACCORDANCE WITH APPLICABLE PERMITS.
3. AFTER THE SANITARY SEWER IS INSTALLED TWO (2) INCHES OF STABILIZED BASE COURSE TO BE REMOVED BY MILLING, AT THE TIME OF THE FINAL PAVEMENT REPAIRS ARE PERFORMED, AND TO BE REPLACED BY TWO (2) INCHES OF SURFACE COURSE. THE SURFACE COURSE SHALL BE PLACED WHEN DIRECTED BY THE TOWNSHIP ENGINEER.

TRENCH AND PAVEMENT REPAIR DETAIL

N.T.S.

TRENCH WIDTH SCHEDULE												
DIA. OF PIPE	8",10",12"	14",15",16"	18"	20",21"	24"	27"	30"	33"	36"	42"	48"	54"
TRENCH WIDTH	3'-0"	3'-8"	4'-0"	4'-3"	4'-6"	4'-10"	5'-0"	5'-6"	5'-8"	6'-3"	6'-10"	7'-6"
BAR SCHEDULE – REINFORCED CONCRETE CRADLE												
LONG. BARS	5 #4	5 #4	8 #4	10 #4	8 #5	7 #6	8 #6	9 #6	10 #6	12 #6	11 #7	12 #7
TRANS. BARS	#4 at 12"	#4 at 12"	#4 at 11"	#4 at 9½"	#4 at 8"	#5 at 11"	#5 at 10"	#5 at 9"	#5 at 8½"	#5 at 8"	#5 at 6½"	#5 at 6"

TRENCH NOTES

1. IF THE ABOVE SCHEDULED TRENCH WIDTHS ARE EXCEEDED, THE CONTRACTOR SHALL USE GREATER STRENGTH PIPE OR INSTALL PIPE IN HIGHER CLASS BEDDING, OR BOTH, AS DIRECTED BY THE ENGINEER, AT NO ADDITIONAL COST TO THE OWNER.
2. TRENCH WIDTHS SHALL BE MEASURED AT THE TOP OF THE PIPE.
3. ALL TRENCHES AND EXCAVATIONS ARE TO BE GIVEN THE STEEPEST SIDE SLOPE PRACTICABLE.

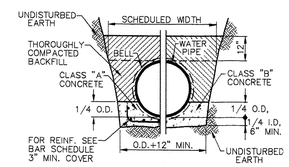

REINF. CONC. CLASS "A" | PLAIN CONC. CLASS "A" MOD.

CONC. CRADLE BEDDING

NOT TO SCALE

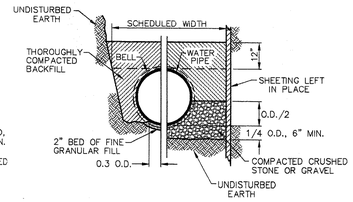

SHAPED BEDDING CLASS "B" | GRANULAR BEDDING CLASS "B" MOD.

FIRST CLASS BEDDING

NOT TO SCALE

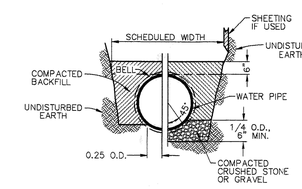

SHAPED BEDDING CLASS "C" | GRANULAR BEDDING CLASS "C" MOD.

ORDINARY BEDDING

NOT TO SCALE

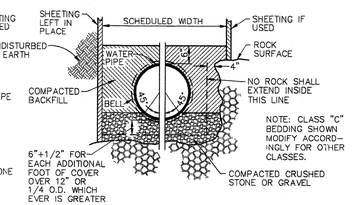

ROCK BELOW TOP OF CRADLE | ROCK ABOVE TOP OF CRADLE

ROCK TRENCH

NOT TO SCALE

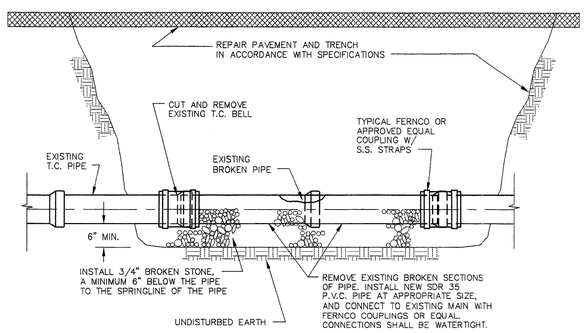

NOTES:

1. OTHER EXISTING PIPE MATERIAL (A.C.P., D.I.P., P.V.C. E.TC.) SHALL BE REPAIRED IN SIMILAR FASHION TO THE SATISFACTION OF THE ENGINEER.
2. IN LIEU OF CUTTING AND REMOVING EXISTING BELL APPLICABLE FERNCO DONUTS OR EQUAL CAN BE USED FOR COMPRESSION SEALING OF SEWER PIPE JOINT AS LONG AS ACTUAL PIPE SIZES ARE COMPATABLE.
3. ALL REPAIRS SHALL BE WATERTIGHT.
4. A COMBINATION DONUT AND CEMENT OR MORTAR IS NOT AN ACCEPTABLE METHOD OF OBTAINING A WATERTIGHT CONNECTION.

TYPICAL SANITARY SEWER SPOT REPAIR DETAIL

N.T.S.

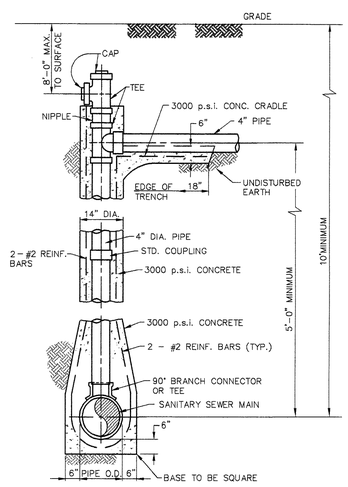

DEEP HOUSE CONNECTION LATERALS

N.T.S.

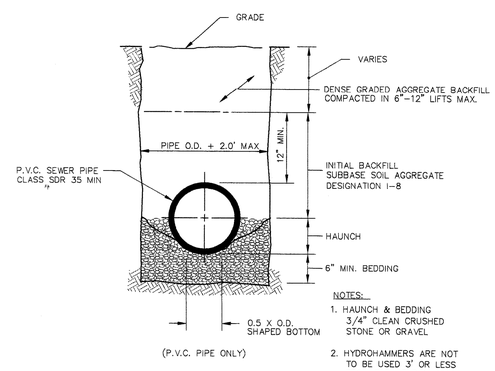

NOTES:

1. HAUNCH & BEDDING 3/4" CLEAN CRUSHED STONE OR GRAVEL
2. HYDROHAMMERS ARE NOT TO BE USED 3' OR LESS FROM TOP OF PIPE.

STANDARD PIPE BEDDING FOR P.V.C. PIPE

N.T.S.

REV.	DATE	DRAWN BY	DESCRIPTION

Matawan Office
Victoria Plaza
30 Freneau Avenue
Matawan, N.J. 07747
Phone (908) 583-5900
Fax (908) 583-6619

Toms River Office
70 East Water Street
P.O. Box 5310
Toms River, N.J. 08754
Phone (908) 349-3400
Fax (908) 349-1572

New York Office
Graybar Building
420 Lexington Ave., Suite 233
New York, New York, 10170
Phone (212) 490-2160
Fax (212) 490-2330

MASER SOSINSKI & ASSOCIATES, P.A.
Engineers ■ Planners ■ Surveyors
Landscape Architects
Valley Professional Center
59 East Mill Road Suite 4 -201
Long Valley, N.J. 07853 ■ (908) 876 - 8400

STANDARD SANITARY SEWER DETAILS

FOR

TOWNSHIP OF ALLAMUCHY

TOWNSHIP OF ALLAMUCHY | COUNTY OF WARREN | NEW JERSEY

SCALE: AS NOTED	DATE: DEC. 1997	JOB No. ALT-041	SHT. No. 2 of 2

PAUL M. STERBENZ
N.J P.E. LIC. No. 32549
P.P. LIC. No. 3702

COPYRIGHT © 1997, MASER, SOSINSKI & ASSOCIATES—ALL RIGHTS RESERVED
THIS DOCUMENT IS AN INSTRUMENT OF PROFESSIONAL SERVICE AND IS NOT INTENDED FOR ANY
PURPOSE ORIGINALLY INTENDED, WITHOUT THE WRITTEN PERMISSION OF MASER, SOSINSKI & ASSOCIATES, IS PROHIBITED

DESIGN BY	DRAWN BY	CHECKED BY	DWG. NO.	FIELD BOOK
H.K.M.	C.J.F.	R.F.W.	LT41-SAN	---

NOV 24,1997-11:3:53 <CG> C:\DWGS\ALT041\LT41-SAN